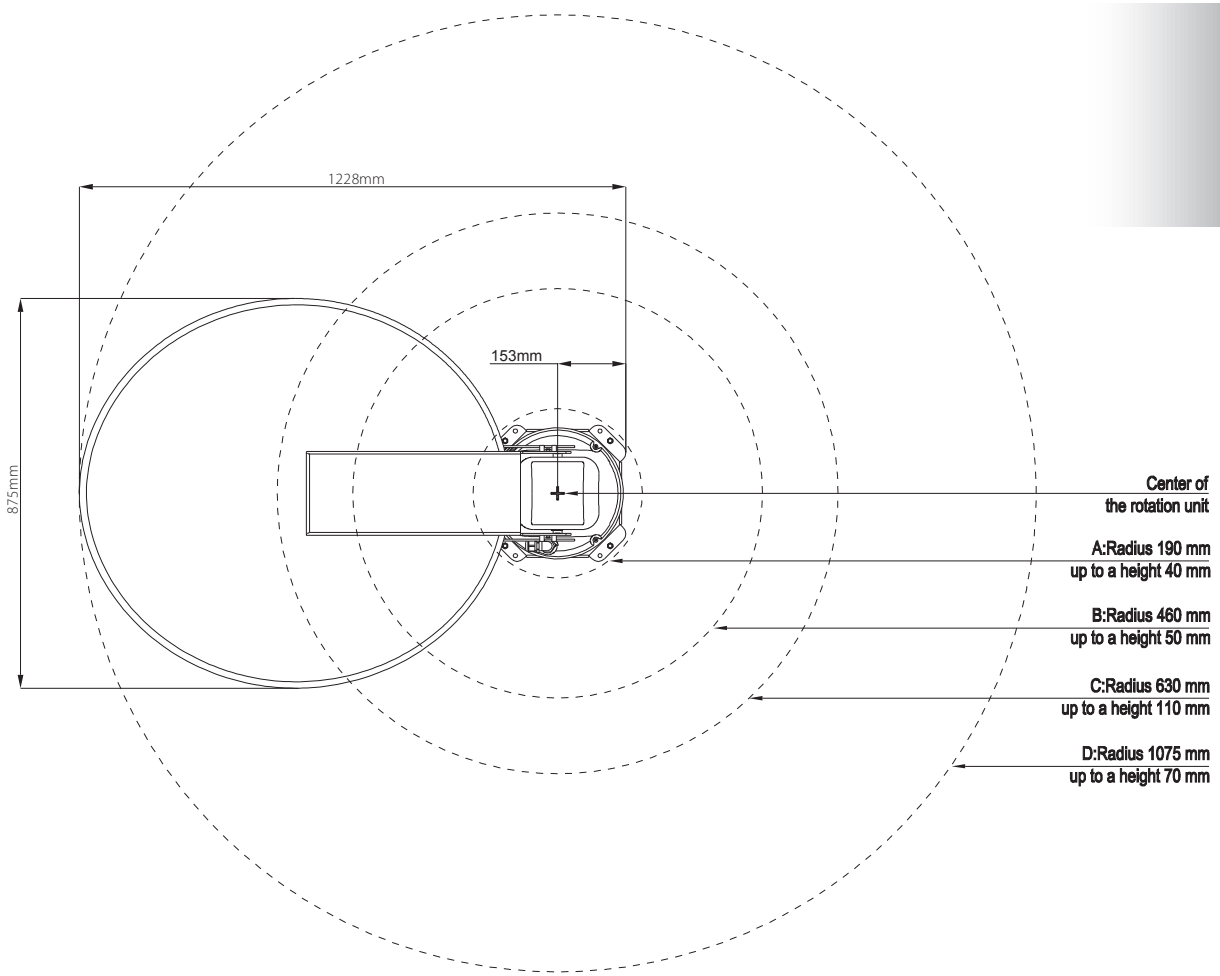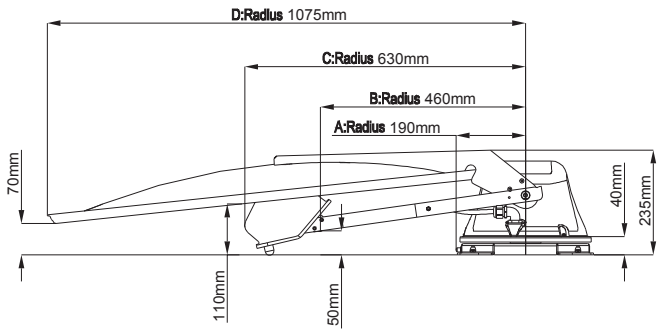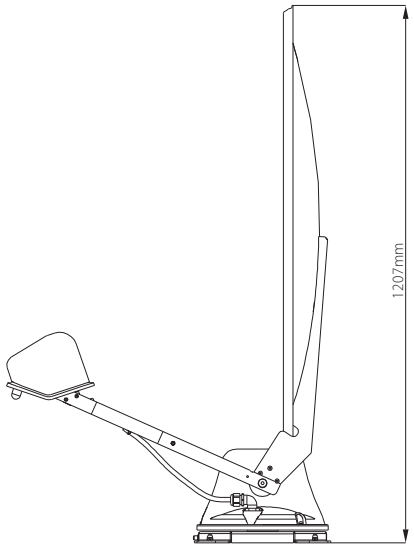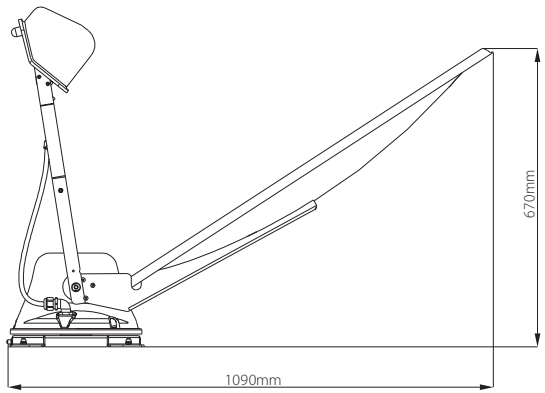A85P Mechanical Constraints Drawing